OPERATION & MAINTENANCE INSTRUCTIONS - ORIGINAL VERSION

AVK DOUBLE ECCENTRIC BUTTERFLY VALVES

SERIES 756

TABLE OF CONTENTS

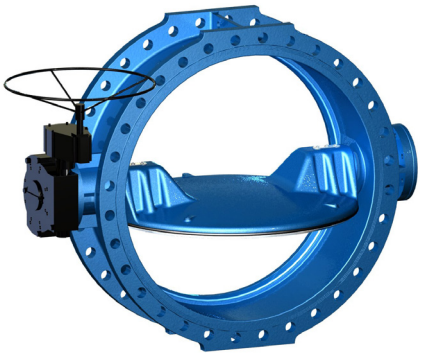

1. General 2
    1.1. Safety 2
    1.2. Proper use 2
    1.3. Identification 2

2. Transport and storage 3
    2.1. Transport 3
    2.2. Storage 4

3. Product features 4
    3.1. Features and function 4
    3.2. Applications 4
    3.3. Performance 4
        3.3.1. Cavitation 4
        3.3.2. Maximum permissible flow velocity 5
    3.4. Permissible and impermissible modes of operation 5

4. Installation in the pipeline 5
    4.1. Conditions required on site 5
    4.2. Installation location 5
        4.2.1. Installations upstream and downstream of the valve 6
    4.3. Installation position 6
    4.4. Assembly instructions and fittings 6

5. Set-up and valve operation 7
    5.1. Visual inspection and preparation 7
    5.2. Functional check and pressure test 7

6. Actuators 7
    6.1. General 7
    6.2. Operating torque 8
    6.3. Assembly of the electric actuator 8

7. Maintenance and repair 8
    7.1. General safety instructions 8
    7.2. Inspection and operation intervals 9
    7.3. Maintenance work and replacement of parts 10
        7.3.1. Design 10
        7.3.2. Recommendations for the replacement parts 10
        7.3.3. Cleaning and lubrication 10
        7.3.4. Replacement of the disc seal 10
        7.3.5. Replacement of the O-rings in the seal housing 12
        7.3.6. Tightening of seal retaining ring 13
        7.3.7. Replacement of the seat ring in the body 14

8. Trouble shooting 14

9. How to contact us 15

Expect... AVK

COPYRIGHT©AVK GROUP A/S 2024 - AVK INTERNATIONAL A/S, BIZONVEJ 1, DK-8464 GALTEN - WWW.AVKVALVES.EU

AVK DOUBLE ECCENTRIC BUTTERFLY VALVES

SERIES 756

1. GENERAL

1.1 SAFETY

These operations and maintenance instructions must be observed and applied at all times.

Arbitrary alterations of this product and any appertaining parts are not allowed. AVK will not assume any liability for the consequent damage due to non-compliance with these instructions.

The generally acknowledged rules of technology must be observed by use of this product (e.g. national standards, EN 593 etc.). The installation must be carried out by qualified personnel only (see also section 7.1. – General safety instructions).

Please see the respective documentation for further technical information on dimensions, materials and applications.

AVK valves are designed and manufactured according to the highest standards and their safety of operation is generally ensured. However, valves may be potentially damaged if operated improperly or not installed for the intended use.

Make sure that the pipeline section is free from hazards and has been depressurised before removing any protective devices and/or performing any work on the valves. Any kind of unauthorised, unintentional or unexpected actuation as well as any hazardous movement caused by stored energy (pressurised air, water under pressure) must be prevented.

During monitoring or inspection of equipment, all relevant laws and regulations must be complied with (the Industrial Code, the Accident Prevention Regulations, the Ordinance of Steam Boilers and instruction pamphlets issued by the Pressure Vessel Study Group). In addition, local accident prevention regulations must be observed.

When a valve serving as an end-of-line valve is opened in a pressurised pipeline, this must be performed with the utmost care to prevent the emerging fluids from causing any damage. Such valve must also be closed cautiously in order to avoid crushing or trapping.

When a valve is dismantled from a pipeline, fluids may emerge from the pipeline or the valve. Therefore, the pipeline must be emptied completely before the valve is dismantled. Be careful that residue does not continue flowing.

1.2 PROPER USE

The AVK double eccentric butterfly valve is a shut-off valve designed for installation in pipelines for drinking water and other neutral liquids.

1.3 IDENTIFICATION

According to EN19, all valves must be marked with an identification label specifying the nominal diameter (DN), nominal pressure (PN), body material and the manufacturer´s logo.

2. TRANSPORT AND STORAGE

2.1 TRANSPORT

During transport to the installation site, the valve must be packed in a safe and stable packing material suitable for the specific valve size. The valve must be completely protected against any kind of atmospheric influence and external damage. Valves that are shipped under specific climatic conditions (e.g. overseas transport) must be specially protected.

The valve must be placed on one of its flanges or alternatively on the flange flat base during transport.

Make sure that the valve is placed in horizontal position during the entire lifting procedure.

The general regulations relating to use of lifting devices must be met at all times.

Transport position - on flange

Transport position - on flat base

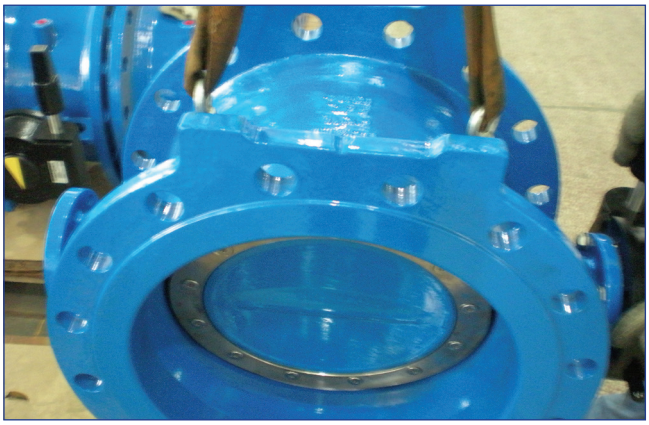

Lifting eyes of valves up to DN 600

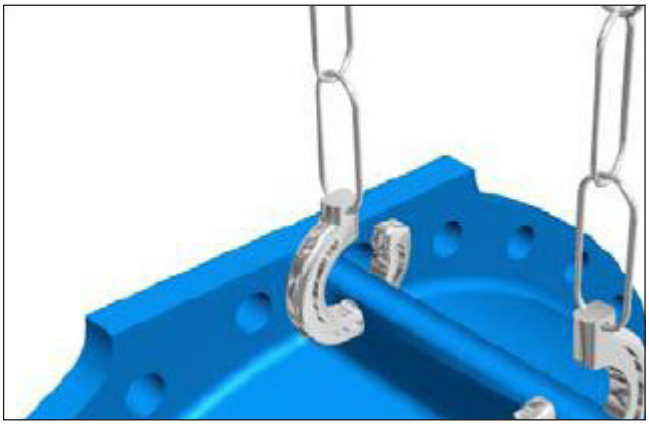

Lifting holes of valves from DN 700

2.2 STORAGE

During storage, the AVK double eccentric butterfly valve disc must be kept slightly open in order not to compress the disc seal.

The elastomeric parts (seals) must be completely protected against direct sunlight and/or UV light in order to secure the long-term sealing function. The valve must be stored in a clean and dry environment and avoid direct heat. Protect all assembly units with an adequate cover to prevent dust and dirt on the disc and body.

The valve must be stored at a temperature between -20°C and +50°C (protected by an adequate cover). If the valve is stored at temperatures below 0°C, it must be warmed up to at least +5°C before installation and before put into operation.

Storage of the double eccentric butterfly valve

3. PRODUCT FEATURES

3.1 FEATURES AND FUNCTION

The AVK double eccentric butterfly valve is applicable for in-line or end-of-line installations.

Due to its double offset design principle, the profile seal ring is completely unstressed when the valve is in slightly open position. If required, the profile seal ring can be disassembled without dismantling the valve.

3.2 APPLICATIONS

It is recommended that the AVK double eccentric butterfly valve are used only in media with no risk of clogging.

The butterfly valve is suitable for the following media:

- drinking water and other neutral liquids
- raw and cooling water (with appropriate corrosion protection)

3.3 PERFORMANCE

3.3.1 CAVITATION

AVK double eccentric butterfly valves are designed for on/off duty. In non-closed position the maximum flow velocity, local pressures and the cavitation limits must be observed.

If cavitation occur, we recommend:

- rise the back pressure, and/or
- change the place of installation

3.3.2 MAXIMUM PERMISSIBLE FLOW VELOCITY

According to EN593, AVK series 756 butterfly valves are designed for the following velocities fully open in liquid media:

- pressure rating PN 6: 2.5 m/s
- pressure rating PN 10: 3 m/s
- pressure rating PN 16: 4 m/s
- pressure rating PN 25: 5 m/s

3.4 PERMISSIBLE AND IMPERMISSIBLE MODES OF OPERATION

The pressure applied on the closed valve must not exceed the rated valve pressure.

The AVK double eccentric butterfly valve has adjustable mechanical limit stops on the gearbox to ensure a correct open and closed position. The stops have been set and sealed from factory to guarantee an optimum performance.

Note: Broken stop seals may affect the warranty.

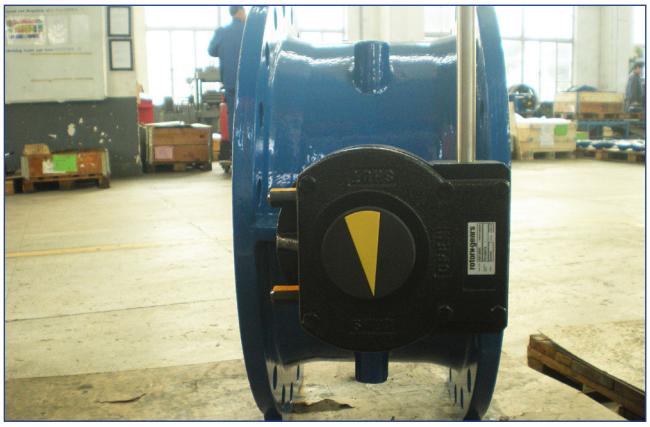

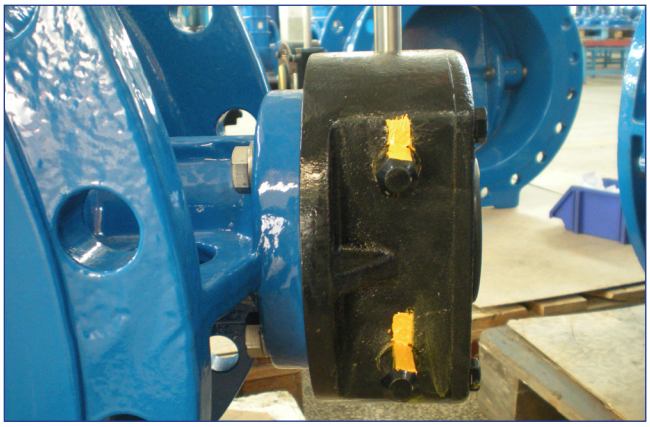

4. INSTALLATION IN THE PIPELINE

4.1 CONDITIONS REQUIRED ON SITE

When the valve is installed between two pipeline flanges, these must be completely aligned. If not aligned, it may result in impermissibly high loads stressing the valve body during operation which may eventually lead to fracture.

When the valve is installed in a pipeline, make sure it is as tension-free as possible. The pipeline forces transmitted to the valve must not exceed the values specified in EN 1074-2. The gap between the flanges must be large enough to avoid damage of the coating on the raised flange face during installation. The pipeline flanges must not be drawn towards the valve during installation.

If work around the valve may cause dirt (e.g. painting, masonry or work with concrete), the valve must be covered adequately. Assembly in drinking water pipelines requires approved sealing materials, lubricants and process material for drinking water only. The pipeline sections must be thoroughly cleaned and purified before the valve is set into operation.

4.2 INSTALLATION LOCATION

The location of the valve on site must allow sufficient space for maintenance work.

If the valve is installed in the open air, make sure it is protected against extreme weather conditions (e.g. formation of ice) by adequate covers.

If the valve is installed as an end-of-line valve, make sure the free outlet side is not accessible for any kind of interference.

4.2.1 INSTALLATIONS IN THE PIPELINE UPSTREAM AND DOWNSTREAM OF THE VALVE

If the valve is used in a contaminated media, it requires a filter with a suitable mesh size placed upstream of the valve in order to prevent malfunction.

The following distances must be kept to avoid irregular flow which could disturb the valve function:

- The distance to elbows, strainers etc. must be kept to a minimum of DN, upstream or downstream.
- The distance to control valves must be kept to a minimum of 10 x DN upstream of the butterfly valve.

4.3 INSTALLATION POSITION

AVK double eccentric butterfly valves in all nominal widths can be installed with shafts in horizontal position (with gear facing upwards or downwards). A vertical position of the valve shaft is possible but it may affect the service life of the valve (number of operating cycles).

Preferred installation

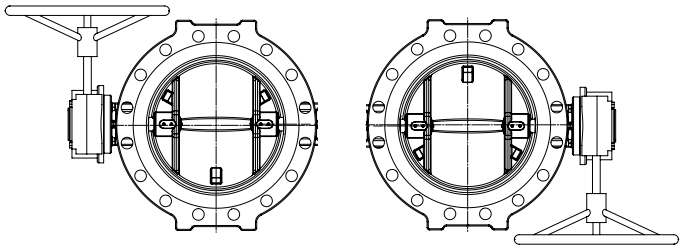

Possible **Do not use**

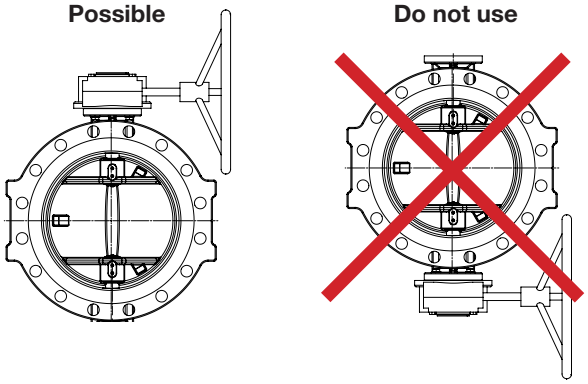

4.4 ASSEMBLY INSTRUCTIONS AND FITTINGS

Check the valve for possible damage that may have occurred during transport or storage.

Protect the valve from any kind of dirt on the construction site by using an adequate cover until installation.

All components (like seat and sealing ring on the disc) must be thoroughly cleaned before installation in order to remove all dirt particles. AVK does not assume any liability for consequential damage caused by dirt, shot-blasting gravel residues etc.

If any equipment is sand-blasted for cleaning prior to the installation, make sure that this equipment is adequately covered. If solvents are used for cleaning, make sure that the solvents do not destroy the pipeline seals or the valve.

The sealing and operational parts must be checked for proper functionality before installation.

If the valve needs a repaint at a later stage, it is important to keep sealing and operational parts completely free from paint. Also, it is not allowed to paint over the identification plates.

Make sure that the proper load suspension devices as well as means of transport and lifting devices are available during

assembly of the AVK double eccentric butterfly valve.

When the AVK double eccentric butterfly valve is in open position, the disc may protrude beyond the overall length. Make sure there is enough space between the disc and other pipeline installations.

Suspending the valve by its disc may lead to damage or destruction of disc or valve.

Hexagon bolts and nuts with washers from flange to flange must be used in the through holes to connect the valve with the pipeline flanges. Fasten the bolts evenly and crosswise to prevent unnecessary tension with cracks or breaks in consequence. The pipeline must not be pulled towards the valve. If the gap between valve and flange is too wide, this must be compensated by thicker seals.

The seal material must be selected according to the operation conditions. However, we strongly recommend steel-reinforced rubber seals according to EN 1514-1.

The operator must select bolts and nuts suitable for the respective operating pressure, temperature, flange material, operational loads and the seal. The choice of seal material and whether the seal is used in main friction connections or secondary friction connections will lead to very different tightening torques of the flange bolts. Therefore, the operator must choose the tightening torque of the flange bolts according to the above parameters.

Make sure the flange bolts are not tightened too hard as this may result in crack formations in the flanges.

Make sure that pipeline flanges are in alignment with each other during installation of the valve.

The pipeline must be laid in a way that prevents harmful pipeline forces from being transmitted to the valve body. If construction work near the valve is still in process, the valve must be adequately covered to protect it from dirt.

5. SET-UP AND VALVE OPERATION

5.1 VISUAL INSPECTION AND PREPARATION

A visual inspection of all functional parts must be performed before valve and equipment are put into operation. Check if all bolted connections have been properly fastened.

5.2 FUNCTIONAL CHECK AND PRESSURE TEST

Prior to operation, the functional parts of the valve must be opened and closed completely at least once to ensure a trouble-free operation.

Warning: It is not allowed to operate the AVK double eccentric butterfly valve in a dry state more than once due to the risk of damaging the disc seals and/or increasing the torques.

A newly installed pipeline system must be thoroughly cleaned to remove all foreign particles. Residue or dirt particles in the pipeline may damage the valve function or its free movement.

Please note that after repair work or upon commissioning of new equipment, it is very important to clean the pipeline system again with the valve in fully open position. If detergents or disinfectants are used, it must be ensured that these materials do not attack the valve material. As a standard, the valve is closed by turning the handwheel clockwise towards the gearbox.

The dimensions of stem and actuators allow valve operation by one person via handwheel. The 90° turn is confined by a limit stop on the gear. If it is turned any further due to excessive force, this may cause damage. Check that the function is working properly by opening and closing the valve several times (not in a dry state).

6. ACTUATORS

6.1 GENERAL

Actuators (gear, pneumatic, hydraulic and electric actuators) are designed for flow velocities according to table 2 in EN 1074-1 (valves for water supply). Any deviating operating conditions need to be specified. Adjustment of the limit stops (open, close) must not be changed without the manufacturer’s approval. If the valve is installed without gear units, it

must be ensured that the valve is not pressurised.

For detailed information on gears and actuators, please see the operation manuals issued by the manufacturer of these components.

The AVK double eccentric butterfly valve has an adjustment angle of 90°. The valve itself is not equipped with position limiters.

6.2 OPERATING TORQUE

Operating torques are the maximum required torques (in Nm) acting on the gearbox input shaft at full differential pressure.

Set points for the actuators are stated in the AVK document “How to order”.

6.3 ASSEMBLY OF THE ELECTRIC ACTUATOR

The electric actuator is mounted on the input flange on the gear unit.

For further information, please contact the actuator manufacturer.

7. MAINTENANCE AND REPAIR

7.1 GENERAL SAFETY INSTRUCTIONS

These instructions must be followed prior to inspection and/or maintenance work on the valve or its assemblies:
- Shut off the pressurised pipeline and depressurise it.
- Secure it against inadvertent activation.
- Comply with all required safety regulations - depending on the type and risk of the fluid conveyed.

When the inspection/maintenance work is completed, all connections must be checked for tightness before resuming operation. Perform the steps described for initial set-up according to section 5, ”Set-up and valve operation”.

Do not remove the gearbox on a pressurised valve!

If removal of the gearbox is necessary, a self-locking device fixing the disc in open position is available upon request for dimensions from DN 150 and up.
Please contact the AVK logistics department for further information on this subject.

Do not use it as blocking device in closed position.

The self-locking device must be mounted as follows:

- Loosen the bolts and remove the end plate on the non-drive shaft side.

- Remove the axial bearing by loosening the 2 bolts with an allen key. This is only required up to and including DN 700. From DN 800 and up it is not needed to remove the axial bearing.

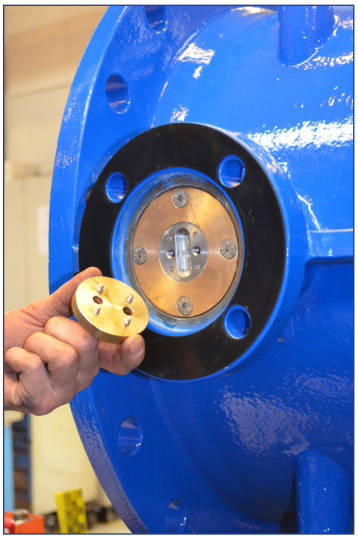

- Assemble the locking device end plate to the non-drive shaft side ensuring that the disc is not in closed position.

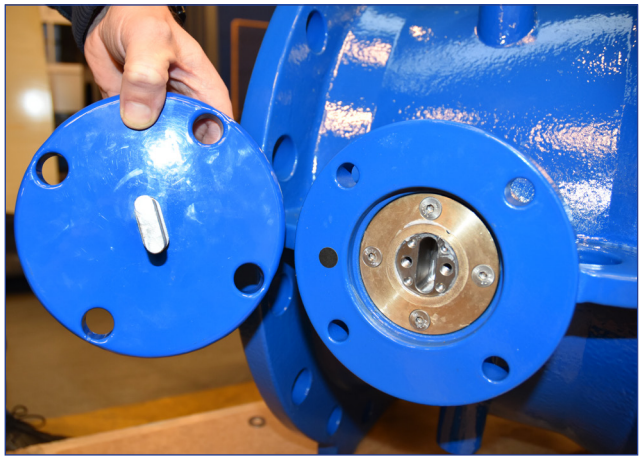

- The gearbox can now be removed from the drive-shaft side.

Statutory and local provisions as well as the safety and accident prevention regulations must be observed and complied with at all times.

Service, maintenance and inspection work as well as replacement of spare parts must be carried out by qualified personnel only. The plant operator is responsible for selecting qualified personnel to carry out any of this work.

If the plant operator does not have personnel with the qualifications required, a training course must be initiated. Upon request, such training course can be held by AVK service employees. The plant operator must ensure that all employees concerned fully understand the operation and maintenance instructions as well as all further instructions referred to here.

Protective equipment such as safety boots, safety helmets, goggles, protective gloves etc. must be worn during any kind of work that prescribes such protective equipment. Incorrect use of the valve must be avoided.

7.2 INSPECTION AND OPERATION INTERVALS

At least once a year, the valve must be inspected for tightness, proper operation and corrosion protection.
In case of extreme operating conditions, such inspection is required more frequently.

7.3 MAINTENANCE WORK AND REPLACEMENT OF PARTS

7.3.1 DESIGN

The below figure serves as a partial overview of the description for the below working steps. For information about spare parts and their parts number, please contact AVK.

1. Bolt
2. End plate
3. Axial bearing
4. O-ring
5. O-ring
6. Stub shaft
7. Body
8. Drive pin
9. Valve shaft
10. Key
11. Self-lubricating bearing
12. Disc
13. Washer
14. Bolt
15. Seal retaining ring
16. Disc seal
17. Disc cover
18. Screw

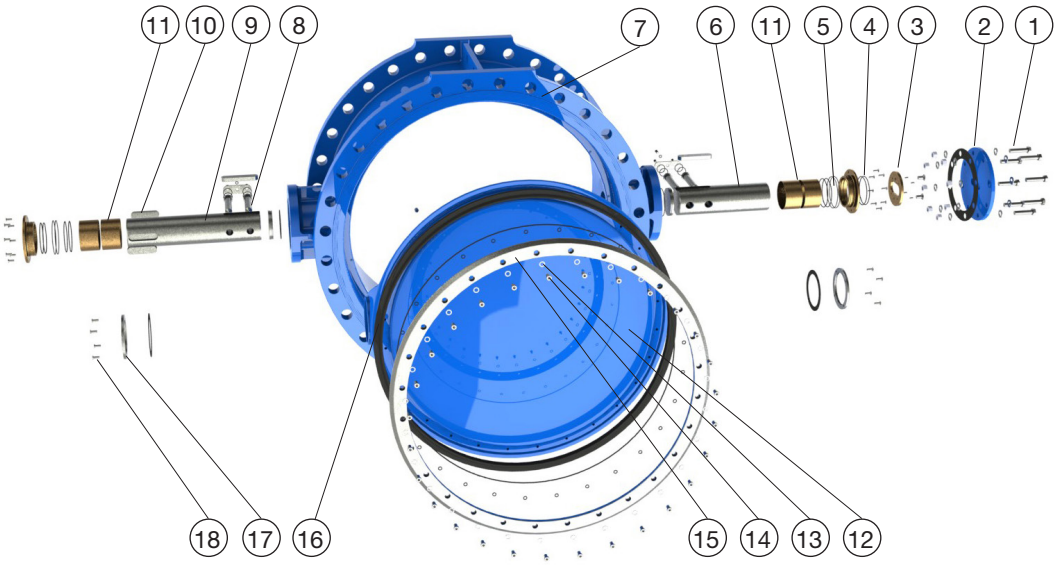

7.3.2 RECOMMENDATIONS FOR THE REPLACEMENT PARTS

Replace disc seal and O-rings whenever necessary.

Intervals of replacement depend on the operating conditions.

7.3.3 CLEANING AND LUBRICATION

Remember to grease the disc seal and O-rings slightly during replacement. Only use lubricants approved for drinking water applications according to local legislation.

7.3.4 REPLACEMENT OF THE DISC SEAL

The disc seal can be replaced without disassembly of the disc.

Disassembly of the disc seal (only with fixed disc on gearbox):

- Open the disc in fully open position (12).
- Detach the retaining ring screws (15).
- Remove the retaining ring (15) and the disc seal (16).
- Clean the disc (12) in the sealing zone.
- Check the seat ring in the body for damage or deposits.
- Insert the new disc seal (16) into the groove of the disc and grease it slightly.
- Insert the screws (14) and fasten them with a torque as specified in section 7.3.6.

7.3.5 REPLACEMENT OF THE O-RINGS IN THE SEAL HOUSING

Remember to grease the disc seal and O-rings slightly during replacement. Only use lubricants approved for drinking water applications according to local legislation.

The valve must be depressurised during this kind of maintenance work:

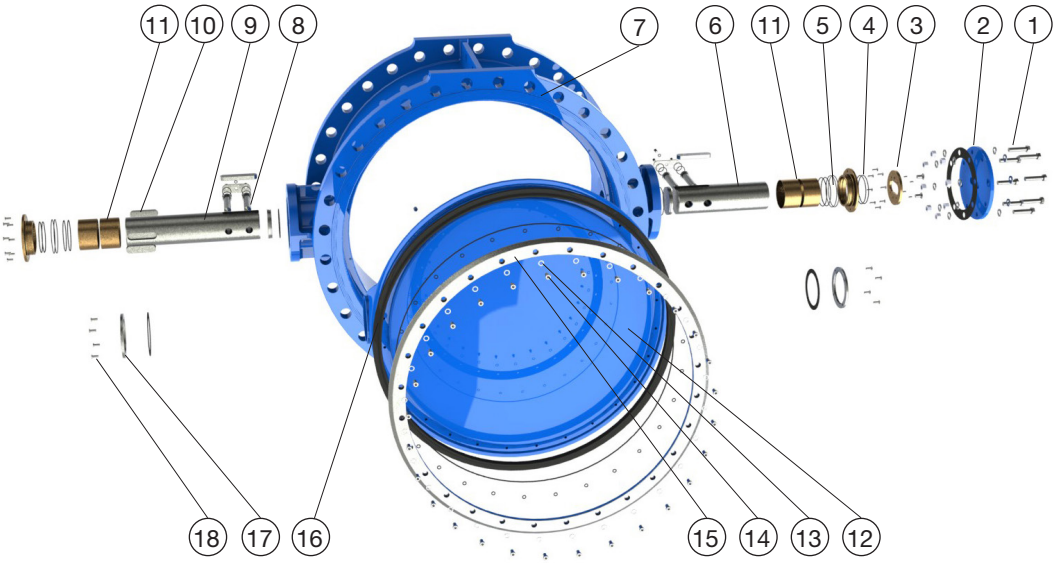

- Turn the disc (12) in closed position.
- Detach the hexagonal nuts at the gear flange and pull off the gear.

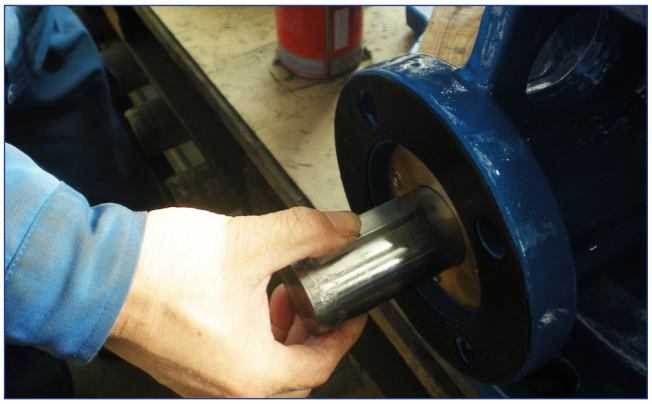

Replacement of O-ring – step 1

- Loosen the hexagonal bolts on the seal housing and then use two bolts to pull it out.

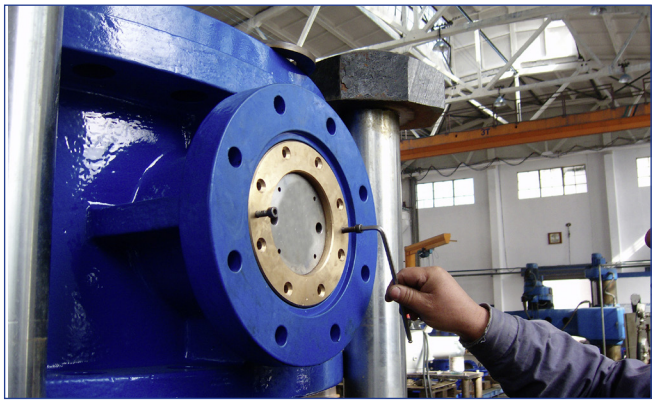

Replacement of O-ring – step 2

- Replace the O-rings and grease them slightly with a drinking water approved lubricant.

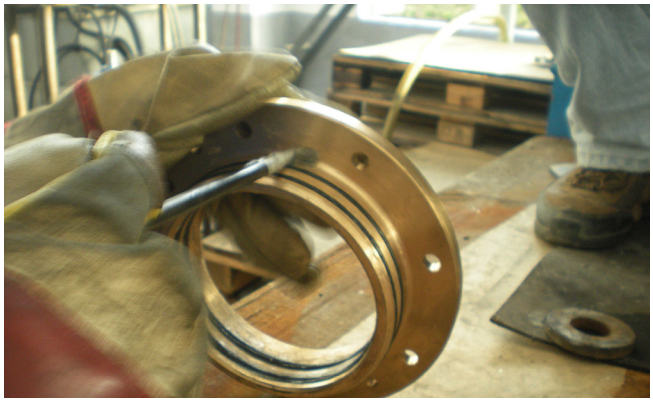

Mounting and greasing of O-rings – step 3

- Reassemble the seal housing
- Make sure that the disc position and gear position indicator match each other before mounting the gear.
- Fasten the gear fixing screws. We recommend application of torques in 4 x thread size e.g. M12 = 48 Nm.

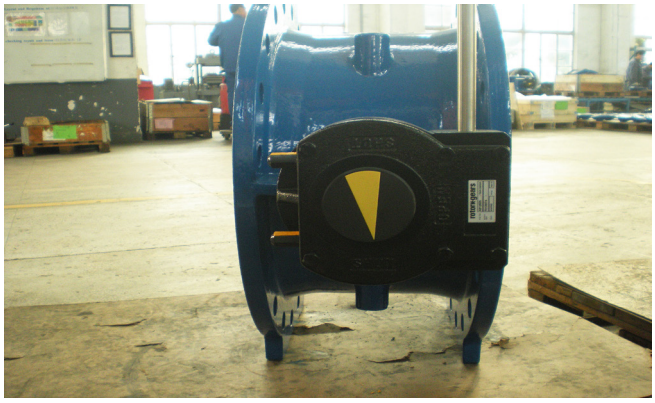

Check of position indicator – step 4

Mounting the gearbox – step 5

- Reassemble in reverse order

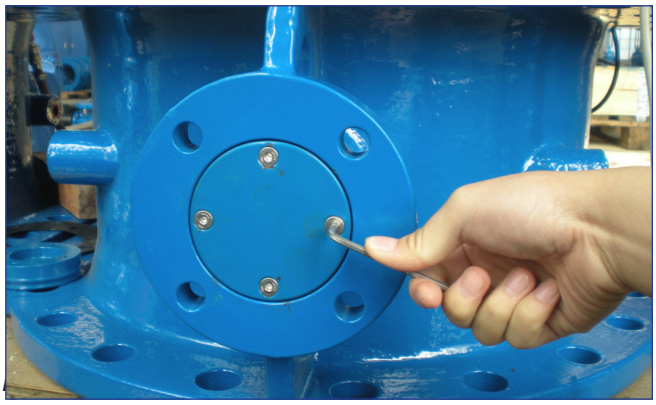

For other bolt dimensions, we recommend application of torques in 4 x thread size, e.g. M12 = 48 Nm.

7.3.6 TIGHTENING OF SEAL RETAINING RING

Bolt torques:

M6	M8	M10	M12
10 Nm	32 NM	40 Nm	50 Nm

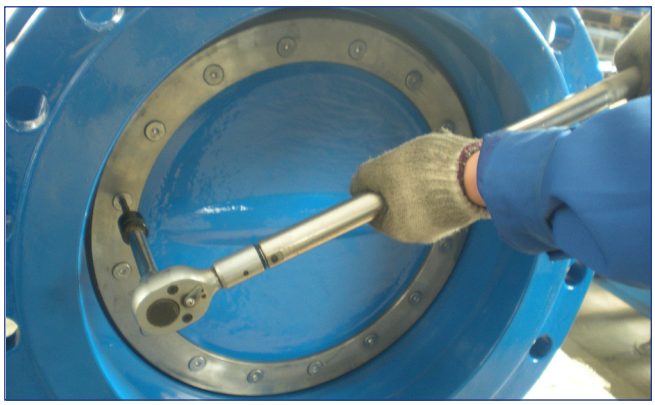

7.3.7 REPLACEMENT OF THE SEAT RING IN THE BODY

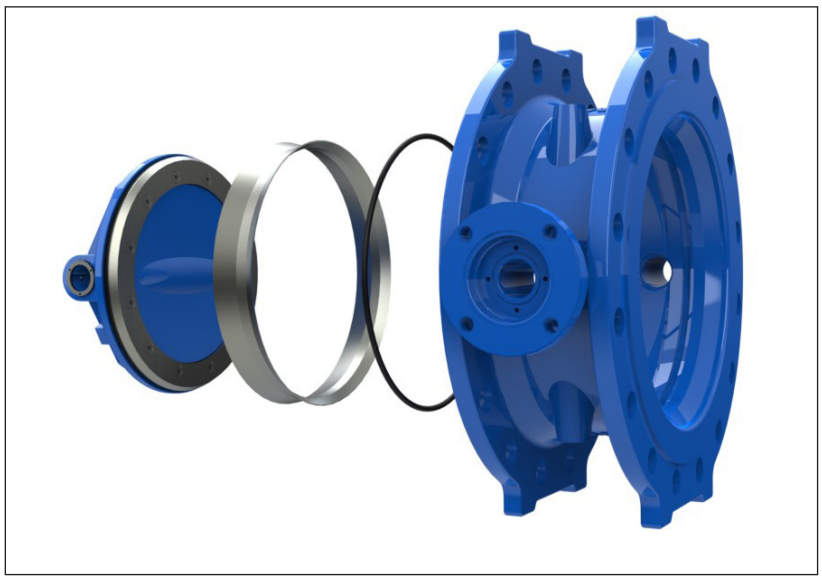

DN 150-600

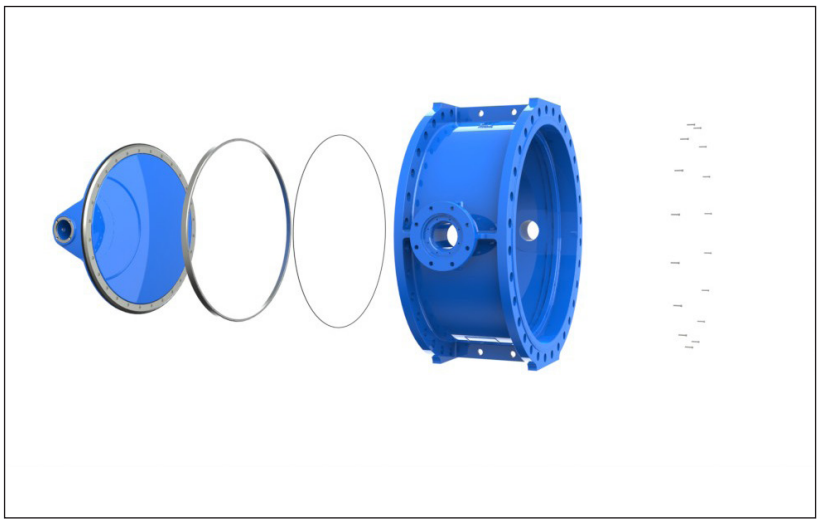

DN 700-2800

- Dismount the disc assembly from the body.
- Dismount the seat ring from the body.
- Check the O-ring and get it mounted securely using drinking water approved grease.
- Mount a new seat ring in the body.
- Remount the disc assembly onto the body.

8. TROUBLE SHOOTING

For any kind of repair and maintenance work, please observe the general safety instructions as described in section 7.1.

Problem	Cause	Remedial actions
Valve makes noise	Unfavourable installation position causing unfavourable flow around or inside the valve (e.g. installed too closely downstream of an elbow).	Change installation position.
	Valve operating beyond its design limits.	Check design and/or operation data, change flow resistance in the valve – if required – by using different intervals.
Valve cannot be operated	Foreign matter jammed in the seat area.	Flush valve, dismantle if necessary, and remove foreign matter.
	Gear blocked.	Undo blocking.
	No electrical connection of the electric actuator.	Establish the electrical connection.
	Unfavourable flow and impairment of movement.	Change installation position.
Leaks in the body seat	The valve is not completely closed.	Close the valve completely.
	Valve seat is damaged or worn.	Replace seat.
Cavitation in valve	Valve operating beyond its design limits.	The butterfly valve is not suitable for use as control valve. Replace the valve with a more suitable type.
	Operational data changed.	
High operating forces	Valve seat polluted by deposits.	Flush the valve, dismantle it if necessary, and clean the seat area.
	The valve is dry in pipeline, no medium present.	The valve is operated more easily when it is wet.

9. HOW TO CONTACT US

You can find your local AVK partner on www.avkvalves.com.